J. Raptor Res. 37(4):323–329
© 2003 The Raptor Research Foundation, Inc.

NEST-SITE CHARACTERISTICS AND LINEAR ABUNDANCE OF CLIFF-NESTING AMERICAN KESTRELS ON SAN CLEMENTE ISLAND, CALIFORNIA

BRIAN L. SULLIVAN,[1] ERIC L. KERSHNER,[2] SEAN P. FINN,[3] ANNE M. CONDON, DOUGLASS M. COOPER, AND DAVID K. GARCELON[4]
Institute for Wildlife Studies, 2515 Camino del Rio South, Ste. 334, San Diego, CA 92108 U.S.A.

ABSTRACT.—American Kestrels (*Falco sparverius*) are typically secondary-cavity nesters, and use of natural cliff cavities for nest sites is less-commonly reported. On San Clemente Island (SCI), California, however, American Kestrels nest primarily on cliffs in major canyons (93%), to a lesser extent on sea cliffs (4%), as well as in man-made structures (3%). We located and mapped 99 American Kestrel territories on SCI, and recorded 11 nest-site characteristics at 40 cliff nests during 2001–02. Nest cliffs were typically fractured igneous rock with mean height of 16.1 m ± 1.8 SE. Mean slope of nest cliffs was vertical ($\bar{x}$ = 91°). Nest cliffs and cavities were significantly oriented to the southeast, away from the prevailing wind direction (NW). In eight canyons, where we believe that we found all occupied American Kestrel territories, the mean linear abundance was 2.1 pairs/km, greater than most published estimates. Contrary to most previous studies, no American Kestrels nested in tree cavities despite their presence in SCI canyons. The absence of cavity-excavating breeding birds from the island likely restricts kestrels to nesting in naturally-formed cavities and man-made structures.

KEY WORDS: *American Kestrel;* Falco sparverius; *California; cliff-nesting; nest abundance; nest site characteristics; San Clemente Island.*

CARACTERÍSTICAS DE LOS SITIOS NIDO Y ABUNDANCIA LINEAR DE CERNÍCALOS QUE ANIDAN EN ACANTILADOS DE LA ISLA SAN CLEMENTE, CALIFORNIA

RESUMEN.—Los cernícalos (*Falco sparverius*) anidan típicamente en cavidades usadas, el uso de cavidades naturales en los acantilados como sitios nido se reporta menos comúnmente. En la Isla de San Clemente (ISC), California, sin embargo, los cernícalos anidan primordialmente en los precipicios de los grandes cañones (93%), y en menor grado en los acantilados marinos (4%), al igual que en estructuras construidas por el hombre (3%). Localizamos y colocamos en un mapa 99 territorios de cernícalos en la ISC, y registramos 11 características de los sitios nido en 40 nidos de acantilados durante 2001–02. los nidos de los precipicios fueron típicamente roca ígnea fracturada con una altura media de 16.1 m ± 1.8 SE. La pendiente promedio de los nidos en acantilados fue vertical ($\bar{x}$ = 91°). Los nidos y las cavidades estuvieron significativamente orientadas hacia el suroriente, lejos de la dirección prevaleciente del viento (NW). En ocho cañones, donde creemos que encontramos todos los territorios de los cernícalos ocupados, el promedio de la abundancia linear fue 2.1 parejas/km, mucho mayor que la mayoría de las estimaciones antes reportadas. Contrario a la mayoría de los estudios previos, ningún cernícalo anidó en las cavidades de los árboles a pesar de su presencia en los cañones de la ISC. La ausencia en la isla de aves que aniden en cavidades excavadas por ellos mismos, probablemente restringe a los cernícalos a anidar en cavidades formadas naturalmente o en estructuras construidas por el hombre.
[Traducción de César Márquez]

---

[1] Present address: PRBO Conservation Science, 4990 Shoreline Hwy., Stinson Beach, CA 94970 U.S.A.
[2] Corresponding author's e-mail address: kershner@iws.org
[3] Present address: USGS, Forest and Rangeland Ecosystem Science Center, 970 Lusk St., Boise, ID 83706 U.S.A.
[4] Present address: Institute for Wildlife Studies, P.O. Box 1104, Arcata, CA 95518 U.S.A.

American Kestrels (*Falco sparverius*) are the most widely distributed and abundant North American falcon. The species is a secondary-cavity nester typically using woodpecker-excavated or naturally-formed cavities in trees, cliffs, and man-made structures (Smallwood and Bird 2002). Although numerous studies described nest box populations (e.g., Smallwood and Collopy 1991, Rohrbaugh and Yahner 1997, Smallwood and Wargo 1997), and extensive work was conducted on tree-nesting populations (Smith et al. 1972, Balgooyen 1976), few quantitative data are available regarding this species' nesting habits in natural cliff cavities (but see Smith et al. 1972, De Lucca and Saggesse 1993). We measured 11 nest site characteristics for 40 confirmed American Kestrel nest cavities in natural cliffs on San Clemente Island (SCI), California. Although several studies have reported density for tree nesting and nest box populations (Craig and Trost 1979, Smallwood and Bird 2002), estimates of density and abundance for cliff-nesting American Kestrels in North America have not been previously reported. Therefore, we present mean linear abundance of breeding pairs in eight canyons on SCI.

METHODS

Study Area. San Clemente Island is the southernmost of the California Channel Islands (32°50′N, 118°30′W), located in Los Angeles County ca. 92 km west of Palos Verdes, CA. SCI is administered by the U.S. Navy and is used for active military training as part of the Southern California Offshore Range; however, the U.S. Navy has an extensive environmental program on the island for the protection and conservation of natural resources (USDN, SWDIV 2001). The island is 44 km long and 2.4–6.4 km wide, encompassing ca. 14 764 ha. Elevation ranges from sea level to 599 m. The island consists of a central plateau incised by canyons along the western and eastern slopes. The east side is a precipitous escarpment, descending from the plateau to the Pacific Ocean; the west side consists of a series of more gentle marine terraces formed as a result of periodic uplifting and erosion from wave action (Vedder and Howell 1980). Canyon bottoms typically contain little water, with continuous flow restricted to rain events. Annual temperature ranges from 10–22°C and mean annual precipitation is 15.7 cm (Olmstead 1958, Vedder and Howell 1980).

Current vegetation on SCI includes mixed native and non-native grasslands (including *Avena, Bromus,* and *Stipa* spp.) on the upper terraces; maritime desert scrub containing California sagebrush (*Artemesia californica*), morning glory (*Calystegia macrostegia*), prickly pear (*Opuntia littoralis*), cholla (*O. prolifera*), snake cholla (*Bergerocactus emoryii*), and wild oats (*Avena* sp.); and remnant patchy shrubland/woodland characterized by island cherry (*Prunus lyonii*), lemonade berry (*Rhus integrifolia*), island oak (*Quercus tomentella*), canyon live oak (*Quercus chrysolepis*), and Catalina ironwood (*Lyonothamnus floribundus*) (Raven 1963, Sward and Cohen 1980, Kellogg and Kellogg 1994).

Nest-site Characteristics. We located and mapped 99 American Kestrel nest sites on SCI during 2001–02 (Fig. 1). We surveyed the island on foot or from a boat during the breeding season (February–June). Territories were considered occupied when a courting adult pair (e.g., prey exchanges, copulation) was present. Nest sites were located by observing adult behavior. When possible, we visually located nests by following an adult flying to its cavity. Nest cavities were defined as occupied when a prey delivery was observed. Nest sites were plotted on topographic maps generated from ArcView 3.2a (Environmental Systems Research Institute, Redlands, CA). If a nesting territory was occupied in two consecutive years, only the first nest detected was included in the nest-site characteristics analysis.

Nest sites were classified as in a canyon cliff, sea cliff, tree, or artificial structure. Canyon cliffs were found within interior canyons. Sea cliffs bordered the ocean. Artificial structures included buildings, junk piles, and abandoned trailers.

We measured nest-site characteristics for all occupied nests where the exact nest cavity was directly visible ($N = 40$). Standard error of the mean is reported. We measured wall height, cliff height, and distance to the canyon bottom using a laser rangefinder and clinometer from the closest accessible perpendicular vantage. Wall height and cliff height were measured on a vertical axis through the nest cavity. Wall height was defined as the area from the canyon bottom to the canyon rim or terrace edge, including vegetated slopes, sheer cliff faces, and rock outcroppings. Cliff height was defined as the facet of the wall (e.g., rock outcropping, sheer face) containing the nest cavity, from its bottom to its top. In some cases when walls were near vertical, wall height and cliff height were identical. Distance to the canyon bottom was measured from the nest to the canyon bottom.

We quantified general characteristics of nesting cliffs by estimating percent slope, cliff complexity, and cliff composition. Two to three observers visually estimated percent slope and then we averaged all estimates. In the field, nest cliffs were estimated as a percentage of vertical, where 100% = vertical. Percent slope was then transformed into degrees (100% = 90°) for analysis. The complexity of the nest cliff's surface was indexed visually and categorized as either flat or convoluted based on the presence of caves, potholes, or jutting rocks. Nest cliff composition was categorized as either solid (no holes or cracks), loose rock (loose granular, scree), fractured (cracked or segmented) or stratified (layered). The amount of vegetation obscuring the entrance of each cavity was categorized as clear of vegetation, partially obscured by vegetation, or completely obscured by vegetation.

Nest cliff aspect and nest orientation (for visible cavities) were measured using the mean compass reading of two or three independent observers. We used Program ORIANA (Kovach 1994) to calculate circular statistics. Standard error of the mean vector is reported. For cliff

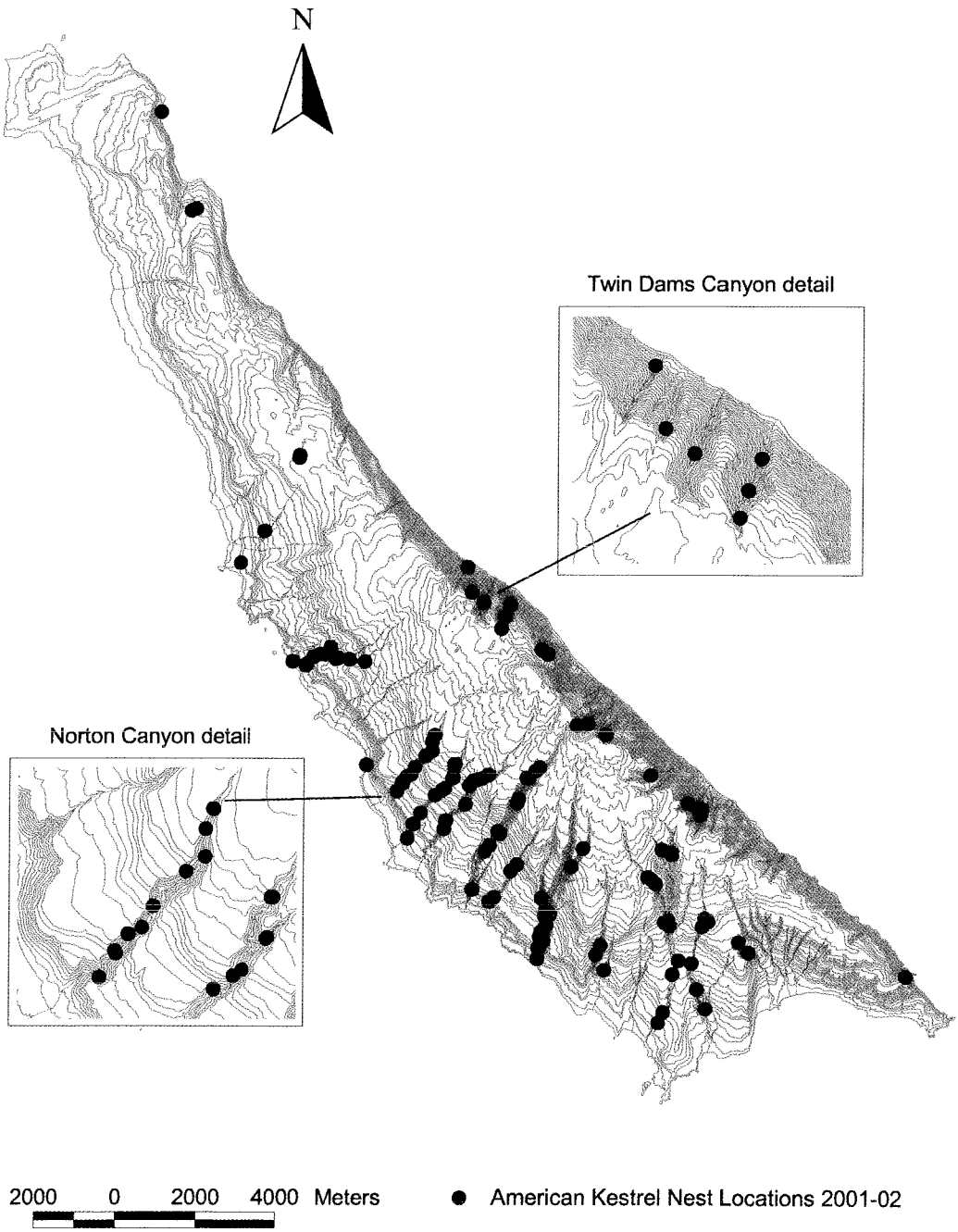

Figure 1. Map of 99 occupied American Kestrel nesting territories on San Clemente Island, CA, 2001–02.

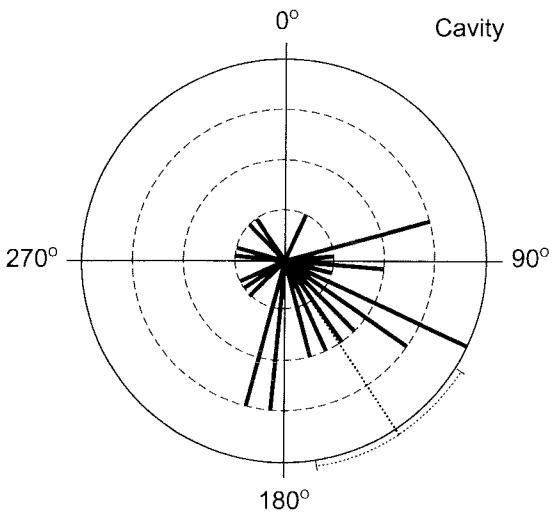

Figure 2. Mean vector analysis of American Kestrel nest cavities, San Clemente Island, CA 2001–02 (Mean vector (μ) = 147° ± 13° SE, $P < 0.001$, $N = 36$).

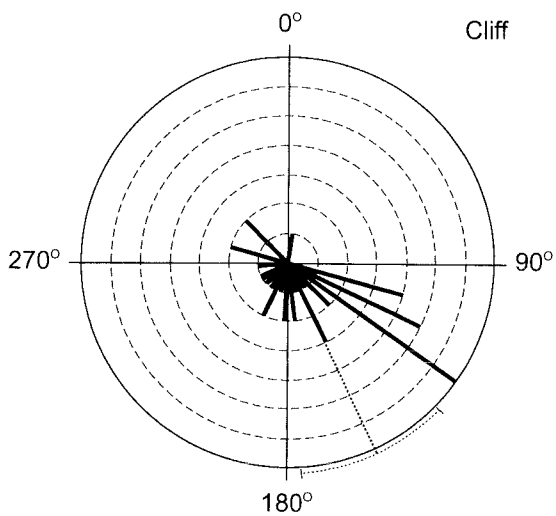

Figure 3. Mean vector analysis of American Kestrel nest cliffs, San Clemente Island, CA 2001–02 (Mean vector (μ) = 155° ± 11° SE, $P < 0.001$, $N = 40$).

aspect and nest orientation, Rayleigh's test of uniformity was used for mean vector analysis.

Linear Abundance. In each of eight canyons that were thoroughly searched, we determined the number of nesting pairs/linear km using ArcView 3.2a. The length of each canyon was calculated using the distance tool in ArcView. Canyon length was defined as the total length of each canyon from its inception on the upper terrace to its mouth along the ocean. We used a linear measure due to confounding factors involved in determining exact area of canyons. The overall mean number of pairs/linear km was then calculated for the eight canyons.

RESULTS

American Kestrels nested primarily in canyons on SCI (Fig. 1). Of 99 territory locations, 92 were on cliffs within interior canyons, whereas four were centered on sea cliffs and three were in man-made structures. Detailed characteristics of nest sites are presented for 40 nests unless otherwise indicated. Mean wall height was 79.4 m ± 7.9 SE, but varied substantially at measured nests. Mean cliff height was 16.1 m ± 1.8 SE. Mean distance from the nest cavity to the canyon bottom was 45.8 m ± 5.8 SE. American Kestrels nested primarily on vertical cliffs ($\bar{x}$ slope = 91°). Only one of 38 (3%) nesting cliffs was classified as being flat whereas the remaining 37 (97%) were characterized as convoluted. Thirty-six nest cliffs (90%) were categorized as fractured and two (5%) were solid; loose rock and stratified cliffs accounted for 2.5% each. Nest-cavity entrances ranged from being completely clear of vegetation (25; 62%) to completely obscured (4; 10%), with 11 (28%) at least partially obscured by vegetation. Vector analysis of 36 nest cavities ($\bar{x}$ vector (μ) = 147° ± 13° SE, $P < 0.001$) and 40 nest cliffs ($\bar{x}$ vector (μ) = 155° ± 11° SE, $P < 0.001$) indicated that both were oriented to the southeast (Figs. 2 and 3). Mean number of nesting pairs in eight canyons was 2.1 ± 0.2 SE pairs/linear km (range = 1.1–3.2 pairs/km) (Table 1).

DISCUSSION

Nest-site Characteristics. American Kestrels are the most widespread breeding raptor on SCI (In-

Table 1. Linear abundance of nesting American Kestrels on San Clemente Island, 2001–02.

Canyon Name	Mean Length in km	Number of Pairs/yr	Pairs/km
Cave Canyon	5.5	11	2.0
Horse Canyon	4.5	8	1.8
Box Canyon	3	5	1.7
Norton Canyon	3.1	8	2.6
Middle Ranch Canyon	2.1	5.5	2.6
Wallrock Canyon	1.7	5.5	3.2
China Canyon	6.3	7	1.1
Horse Beach Canyon	4	6	1.5
Totals	30.2	56	2.1

stitute For Wildlife Studies unpubl. data), and are found predominately in canyons with vertical cliffs. The largely cliff-nesting habits of American Kestrels on SCI have not been commonly reported in previously-described populations. We found American Kestrels nesting in interior canyon cliffs despite the fact that trees, sea cliffs, and man-made structures were available. Although data on availability of these three cavity types were not collected, our results suggest high usage of canyon cliffs for nest sites. In central Utah, Smith et al. (1972) found only two of 41 nests (5%) in cliffs (abandoned rock quarries), the remainder being located in trees and man-made structures. While the geography of Smith et al.'s study site was clearly different from that of SCI, similar nesting resources were available for both populations. In addition, cliff nests reported in Smith et al. (1972) were located in a human-altered landscape, further confounding potential comparison with those found in naturally-formed cavities in cliffs on SCI. The high incidence of cliff use in our study indicates that American Kestrels will accept natural cliff cavities where tree cavities are not available. Several species of woodpeckers visit SCI during the nonbreeding season (Jorgensen and Ferguson 1984); however, they do not construct nest cavities. Although natural-tree cavities occur on SCI, they are likely uncommon, and some features (e.g., location, cavity dimensions) may render them unsuitable for nesting American Kestrels.

American Kestrels did not use sea cliffs for nesting, despite their abundance on SCI. We hypothesize that sea cliff cavities may have undesirable moisture levels due to crashing surf and salt spray, and may be too exposed to wind. Also sea cliff nests may negatively influence fledging success due to their location over water.

Nest sites were found on a variety of wall heights, however, nest cavities were confined to sheer rock faces or rock outcroppings within these walls. The lack of American Kestrel nest cavities in anything other than fractured, convoluted rock may be an artifact of the geomorphic composition of SCI. Nest cliffs appear to be highly variable, as is evident in the large range of cliff sizes, wall heights, and elevations above the canyon bottom in our sample. Vertical cliffs seem most likely to be used for nesting on SCI and may be associated with protection from mammalian predation (e.g., black rat [*Rattus rattus*], house mouse [*Mus musculus*], deer mouse [*Peromyscus maniculatus*], feral cat [*Felis sylvetris*], island fox [*Urocyon littoralis*]).

In contrast to other studies (Rohrbaugh and Yahner 1997, Smallwood and Bird 2002), American Kestrels on SCI occasionally nested in cavities that were partially to completely obscured by vegetation, typically cacti (e.g., *Opuntia* sp., *Bergerocactus emoryii*) or morning glory. We suggest that these sites could be selected to prevent predation by Common Ravens (*Corvus corax*). Ravens have been observed clinging to canyon walls attempting to access nests, and in some cases directly taking American Kestrel chicks on SCI (B. Sullivan pers. observ.). Use of prickly pear, cholla, and snake cholla to obscure nest entrances may be a form of nest defense on SCI.

American Kestrels typically nest in cavities with entrances facing away from the prevailing direction of seasonal storms, or those typically oriented to the east or southeast (Balgooyen 1976, 1989, Brauning 1983). West-facing nest boxes in California exhibited high failure rates (Bloom and Hawks 1983). We also found that American Kestrel nest cavities were oriented away from the prevailing northwest wind and toward the morning sun (Fig. 2). Nest-cavity selection may be especially important when driving wind and rain, associated with strong frontal systems, may make cavity microclimates on west-facing slopes undesirable.

Linear Abundance. American Kestrel breeding density varies with nest site and resource availability. Density estimates range from 0.11–1.74 pairs/km^2, but can be as high as 24.7 pairs/km^2 (Bird and Palmer 1988, Smallwood and Bird 2002). In Patagonia, the density of six American Kestrel nests found in basaltic cliffs was 0.038 pairs/km^2 (De Lucca and Saggesse 1993). In linear habitat along the Big Lost River, southeastern Idaho, Craig and Trost (1979) reported 0.5–0.9 nests/km of river. In South America, kestrel territories averaged 0.12/km^2 (Balgooyen 1989). Compared to the estimates in Craig and Trost (1979) and Balgooyen (1989), American Kestrels on SCI nested in higher linear abundance (2.1 pairs/km). A relatively small proportion of the island's surface is made up of canyons (ca. 9%, Institute for Wildlife Studies unpubl. data), however, even fewer tree cavities likely exist. Thus, nesting areas confined to canyons, coupled with an adequate prey base, may combine to support American Kestrel abundance to above average levels on SCI.

On SCI, considerable variation in American Kes-

trel abundance between canyons may occur due to extreme inter-canyon variation in the amount and types of cliffs available. The subsample of eight canyons used for abundance were all located on the west side of SCI, where canyons tend to be longer, shallower, and have less relief than those of the east side. Due to restricted access to the east side of SCI, a thorough census was not completed for any canyon, thus extrapolation of abundance to these areas may not be warranted.

Breeding American Kestrels on SCI are a recent phenomenon (Jorgensen and Ferguson 1984). Neither Grinnell (1897) nor Mearns (cited in Jorgensen and Ferguson 1984) detected any American Kestrels during their initial spring visits to SCI in the late 1800s. Linton (1908) reported them as "occasional" by 1907; however, he made no mention of this species breeding during an April visit to SCI. Howell (1917) considered them to be "probably resident" by 1917. Jorgensen and Ferguson (1984) counted 70 kestrels on 2 January 1980, and considered them a common resident. Currently, counts as high as 249 birds from 9–15 November 2001 (Institute for Wildlife Studies. unpubl. data) suggest a further increase in numbers.

We hypothesize that the apparent change in breeding status of this species, from unknown to abundant, may be associated with the loss of native ground cover to feral herbivores, and the subsequently ideal habitat for foraging American Kestrels. *Lavatera* reportedly constituted an "unbroken forest, extending for miles upon the high plateaus," and *Dudleya* "covered the ground throughout the entire island," prior to the introduction of feral grazers (Raven 1963). With the decimation of SCI's historic vegetation, more open habitat was created, possibly allowing American Kestrels on SCI to flourish.

ACKNOWLEDGMENTS

This study was funded by the Commander in Chief, Pacific Fleet, and was conducted under contract number N68711-99-C-6665, with logistical and technical support from the U.S. Navy Region Southwest, Environmental Department, Natural Resources Office, San Diego, CA. We thank the Natural Resources Office, Commander, Navy Region Southwest, and Southwest Division, Naval Facilities Engineering Command for funding this research. We thank Jonathan H. Plissner and Suellen Lynn for providing useful comments on an earlier draft of this manuscript. The critiques of T.G. Balgooyen, P.B. Wood, and an anonymous reviewer improved the final version of this manuscript.

LITERATURE CITED

BALGOOYEN, T.G. 1976. Behavior and ecology of the American Kestrel (*Falco sparverius l.*) in the Sierra Nevada of California. *Univ. Calif. Publ. Zool.* 103:1–83.

———. 1989. Natural history of the American Kestrel in Venezuela. *J. Raptor Res.* 23:85–93.

BIRD, D.M. AND R.S. PALMER. 1988. American Kestrel. Pages 253–290 *in* R.S. Palmer [ED.], Handbook of North American birds, Vol. 5. Diurnal raptors. Part 2. Yale Univ. Press, New Haven, CT U.S.A.

BLOOM, P.H. AND S.J. HAWKS. 1983. Nest box use and reproductive biology of the American Kestrel in Lassen County, California. *Raptor Res.* 17:9–14.

BRAUNING, D. 1983. Nest site selection of the American Kestrel (*Falco sparverius*). *Raptor Res.* 17:122.

CRAIG, T.H. AND C.H. TROST. 1979. The biology and nesting density of breeding American Kestrels and Long-eared Owls on the Big Lost River, southeastern Idaho. *Wilson Bull.* 91:50–61.

DE LUCCA, E.R. AND M.D. SAGGESSE. 1993. Nesting of the American Kestrel (*Falco sparverius*) in Patagonia. *Hornero* 13:302–305.

GRINNELL, J. 1897. Report on the birds recorded during a visit to the islands of Santa Barbara, San Nicolas and San Clemente in the spring of 1897. *Pasadena Acad. Sci.* 1:4–26.

HOWELL, A.B. 1917. Birds of the islands off the coast of southern California. *Pac. Coast Avif.* 12.

JORGENSEN, P.D. AND H.L. FERGUSON. 1984. The birds of San Clemente Island. *West. Birds* 15:111–130.

KELLOGG, E.M. AND J.L. KELLOGG. 1994. San Clemente Island vegetation condition and trend and the elements of ecological restoration. Southwest Division, Naval Facilities Engineering Command, San Diego, CA U.S.A.

KOVACH, W.L. 1994. Oriana for Windows, Ver. 1.0. Kovach Computing Services, Pentraeth, Wales, U.K.

LINTON, C.B. 1908. Notes from San Clemente Island. *Condor* 10:82–86.

OLMSTEAD, F.H. 1958. Geologic reconnaissance of San Clemente Island, California. *U.S. Geol. Surv. Bull.* 1071-B:55–68.

RAVEN, P.H. 1963. A flora of San Clemente Island, California. *Aliso* 5:289–347.

ROHRBAUGH, R.W., JR. AND R.H. YAHNER. 1997. Effects of macrohabitat and microhabitat on nest-box use and nesting success of American Kestrels. *Wilson Bull.* 109: 410–423.

SMALLWOOD, J.A. AND D.M. BIRD. 2002. American Kestrel. *In* A. Poole and F. Gill [EDS.], the birds of North America, No. 602. The Birds of North America, Inc., Philadelphia, PA U.S.A.

——— AND M.W. COLLOPY. 1991. The responses of southeastern American Kestrels to increased availability of nesting sites in two habitats. *J. Raptor Res.* 25:160.

——— AND P.J. WARGO. 1997. Nest site habitat structure

of American Kestrels in northwestern New Jersey. *Bull. N.J. Acad. Sci.* 42:7–10.

SMITH, D.G., C.R. WILSON, AND H.R. FROST. 1972. The biology of the American Kestrel in central Utah. *Southwest. Nat.* 17:73–83.

SWARD, W.L. AND R.H. COHEN. 1980. Plant community analysis of San Clemente Island. Report to Naval Ocean Systems Center, San Diego, CA U.S.A.

U.S. DEPARTMENT OF THE NAVY, SOUTHWEST DIVISION. 2001. San Clemente integrated natural resources management plan draft final, October 2001. Tierra Data Systems, Escondido, CA U.S.A.

VEDDER, J.G. AND D.G. HOWELL. 1980. Topographic evolution of the southern California borderland during late Cenozoic time. Pages 7–31 *in* The California Channel Islands: proceedings of a multidisciplinary symposium. D.M. Powers [ED.], Santa Barbara Museum of Natural History, Santa Barbara, CA U.S.A.

Received 4 November 2002; accepted 3 August 2003